SAFELINE
Metal Detection

Mettler-Toledo Product Inspection
1571 Northpointe Parkway
Lutz, FL 33558

Main: (813) 889-9500
Fax: (813) 881-0840
24/7 Support: (800) 447-4439

www.mt.com/pi

METTLER TOLEDO

Color Inside

Customer

Name: Wayne Farms LLC

Country:

System

Name: M34R V5 Metal Detector SL1500

Assembly

SAP Material #: 30916924 Rev: A

Description: Enclosure, EAC,Main SL1500, EL_ENC_B

Complementary Assemblies

SAP Material #:	Description:
30916934	Kit, EAC,Mechanical Misc SL1500
-	-
-	-
-	-

Documentation

Designation:	EPL010605
EA Number:	30916892
Drawn:	E. Ymeraj
Drawn Date:	9/13/2023
Checked:	D. Doyle
Checked Date:	9/13/2023

Rev: A

SO#

SO#_Line Item(s):

145785007 _10

-

-

-

-

Form PIUS.SL.TITLE_PAG.F261R08

Title page

Cover Sheet

METTLER TOLEDO
SAFELINE
Metal Detection

Mettler-Toledo Product Inspection
1571 Northpointe Parkway
Lutz, FL 33558

Main: (813) 889-9500
Fax: (813) 881-0840
24/7 Support: (800) 447-4439
www.mt.com/pi

This drawing and any design, development, invention, or copyright which it may embody or represent are the sole property of Mettler-Toledo. This drawing may not be copied in whole or in part, nor any subject matter shwn herein be manufactured, without the prior express written consent from an authorized agent of Mettler-Toledo.
This safety circuit diagram is an outcome of a comprehensive risk assesment and qualification of the circuit components and architecture. This safety circuit should not be modified in any manner at any time without the express written consent of Mettler-Toledo. Modification of the circuit structure or components may cause damage to property, injury to persons, or death.

Project Name: EPL010605	Project Number: EPL010605	Change	3/16/2023	Assembly ID: 30916892 A		ECN No.
Project Description: M34R V5 Metal Detector SL1500		Drawn: E. Ymeraj	9/13/2023	Function		Scale: 1 : 1
Variant Description: Enclosure, EAC,Main SL1500, EL_ENC_B		Checked: D. Doyle	9/13/2023	Mounting Location	Project Status	Format: ANSI A
Page Description: Title page		Document Type: Electrical Schematic		DCC: &EFS1	Project Rev: A	Page: 1 / 16

Electrical Schematic

Form PIUS.SL.TAB_CON.F06.R04

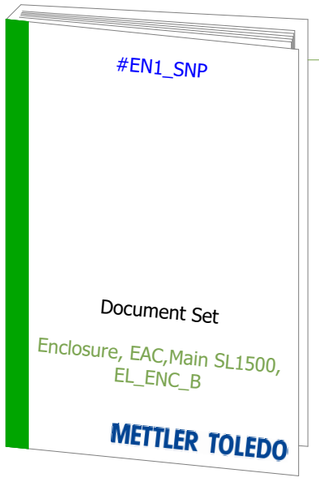

&EFS1
Electrical Schematic

Page designation					Page description	Date	Edited by
	DCC	Function	Mounting location	Number			
				1	Title page	3/16/2023	
				2	Table of Contents	9/26/2023	
				3	General Info	6/23/2023	
				4	Parts List	9/26/2023	
				5	AC Power Distribution	9/13/2023	
				6	Safety Circuit	9/14/2023	
				7	Control Circuits	9/14/2023	
				8	Control Circuits	9/26/2023	
				9	Metal Detector Power Supply	9/26/2023	
				10	Panel Layout	9/26/2023	
				11	Item Legend	9/26/2023	
				12	Cable Connection List	9/26/2023	
				13	Cable Connection List	9/26/2023	
				14	Cable Connection List	9/26/2023	
				15	Cable Connection List	9/26/2023	
				16	Wire Connection List	9/26/2023	

Table of Contents

METTLER TOLEDO
SAFELINE
Metal Detection

Mettler-Toledo Product Inspection
1571 Northpointe Parkway
Lutz, FL 33558

Main: (813) 889-9500
Fax: (813) 881-0840
24/7 Support: (800) 447-4439
www.mt.com/pi

This drawing and any design, development, invention, or copyright which it may embody or represent are the sole property of Mettler-Toledo. This drawing may not be copied in whole or in part, nor any subject matter shwn herein be manufactured, without the prior express written consent from an authorized agent of Mettler-Toledo.
This safety circuit diagram is an outcome of a comprehensive risk assesment and qualification of the circuit components and architecture. This safety circuit should not be modified in any manner at any time without the express written consent of Mettler-Toledo. Modification of the circuit structure or components may cause damage to property, injury to persons, or death.

Project Name: EPL010605	Project Number: EPL010605	Change:	9/26/2023	Assembly ID: 30916892 A		ECN No.
Project Description: M34R V5 Metal Detector SL1500		Drawn: E. Ymeraj	9/13/2023	Function		Scale: 1 : 1
Variant Description: Enclosure, EAC,Main SL1500, EL_ENC_B		Checked: D. Doyle	9/13/2023	Mounting Location	Project Status	Format: ANSI A
Page Description: Table of Contents		Document Type: Electrical Schematic		DCC: &EFS1	Project Rev: A	Page: 2 / 16

General Information

COLOR ABBREVIATION	
BK	BLACK
BN	BROWN
RD	RED
OG	ORANGE
YE	YELLOW
GN	GREEN
BU	BLUE
VT	VIOLET
GY	GREY
WH	WHITE
PK	PINK
GD	GOLD
TQ	TURQUOISE
SR	SILVER
GNYE	GREEN/YELLOW
SH	SHIELD
WHBU	WHITE/BLUE
WHBK	WHITE/BLACK
WHBN	WHITE/BROWN

WIRE GAUGE	
mm²	AWG
0.14	26
0.25	24
0.34	22
0.50	20
1.0	18
1.5	16
2.5	14
4	12
6	10
16	8

CIRCUIT IDENTIFICATION (EXCEPT MULTI-CORE CABLES)	
DESCRIPTION	COLOR
AC power circuits	BLACK
Grounded AC power circuits (Neutral)	WHITE
Protective Earth Conductors	GREEN/YELLOW
<50VDC power & control	BLUE
Grounded <50VDC power & control	WHITE/BLUE
External ungrounded circuits	ORANGE
External grounded circuits	WHITE/ORANGE

DEVICE DESIGNATION	
-B	Sensor e.g. Reject Verification, Bin Full
-BGC	Interlock Switch
-BPA	Air Pressure Switch
-BS	Encoder, Tachometer
-F	Fuse, Miniature Circuit Breaker
-G	Energy source e.g. X-Ray Generator
-I/P	Programmable Input located in MD Power Supply
-K	Relay (except for Power Contactor Relay)
-KF	PC, PLC, HiQiQ Detector
-KFD	Safety Relay
-KG	Relay Timer Multifunction
-KH	Pneumatics Valve e.g. Reject Valve, Air Dump
-KK	Solenoid Operated Lock i.e. Bin Locking Solenoid
-KM	Relay for power isolation
-M	Motor, Fan
-MDPS	Metal Detector Power Supply
-O/P	Programmable Input located in MD Power Supply
-P	Lamp, Signaling Device, Beacon
-PG	Low Air Indicator
-PH	HMI, Text display
-PJ	Horn, Buzzer
-PR	Safety Circuit Warning Indicator
-Q	Main Switch, Isolator/Power Disconnect
-R	Resistor Network PCB, Potentiometer
-RFA	EMC Filter
-RFB	EMC Core (Ferrite)
-RL	Relay located in MD Power Supply
-S	Switch (except air), Pushbutton, Safety Interlock
-SGC	Switch Emergency Stop
-T	Mains filter, Surge Suppressor, Power Supply
-TA	Motor Speed Controller
-U	Mounting panel
-W	Multi-core Cable
-X	Terminal, Connector, Plug & Socket
-XE	Earth point (bonding)
-XG	IO Distribution

SYMBOL	DESCRIPTION	SYMBOL	DESCRIPTION
	EXTERNAL POWER SOURCE		KEY SWITCH (NORMALLY OPEN)
	PNEUMATICS VALVE		PUSH BUTTON SWITCH (NORMALLY OPEN)
	RELAY COIL	1) 2)	1) SWITCH CONTACT 2) POWER CONTACTOR (NORMALLY OPEN)
M 3~	MOTOR (3 PHASE)		PUSH BUTTON SWITCH (NORMALLY CLOSED)
	PROXIMITY SWITCH	1) 2)	1) SWITCH CONTACT 2) POWER CONTACTOR (NORMALLY CLOSED)
P	PRESSURE SWITCH (AIR DUMP VALVE)		EMERGENCY STOP PUSH BUTTON (LATCHED)
	PHOTOELECTRONIC SENSOR (RETRO-REFLECTIVE)		MINIATURE CIRCUIT BREAKER
	POWER SUPPLY UNIT		MECHANICAL LIMIT SWITCH
	FILTER	P	PRESSURE SWITCH
	ROTARY DISCONNECT SWITCH		SIGNAL LAMP
	DEVICE/ ELECTRICAL ASSEMBLY		FUSE
NxS BN BU	MULTI-CORE CABLE N= NO. OF CONDUCTORS S= SIZE OF CONDUCTORS		PLUG / SOCKET
	SHIELD/CABLE SCREEN		TERMINAL
	VOLTAGE INDICATOR		

TERMINAL TIGHTENING TORQUE			
PART#/SAP#	DESCRIPTION	WIRE GAUGE AWG (mm²)	TORQUE lb•in (N•m)
28217660	Lug, Grounding/Aluminum	#14–10 (0.82 - 5.3) #8 (8.4)	20 (2.3) 25 (2.8)
28218378	Kit, Ground Bar/5 Terminal/2.54"L	#14–10 (0.82 - 5.3) #8 (8.4)	20 (2.3) 25 (2.8)
28218263	Block, Terminal/PA/Orange	#26–10 (up to 4)	9.0 (1.0)
28120751	Block, Terminal/2-Tier/25A/600V	#26–12 (up to 2.5)	4.5…7.1 (0.5…0.8)

Nameplate

SO#: 145785007 _ 10

Model Type: SL1500

Date of Manufacture:

Voltage: 120 VAC 1Ø FLA: 15 A

Frequency: 50/60 Hz Largest Motor or Load (A): 3.1 A

SCCR: 5 kA rms @ 120 VAC max Air Supply: -

Electrical Dwg: EPL010605 Rev: A

Enclosure Rating: Type 4X IP Rating: IP69

Label: No

Safety Circuit

WARNING

The safety circuit diagram is an outcome of a comprehensive risk assessment and qualification of the circuit components and architecture. The safety circuit should not be modified in any manner at any time without the express written consent of Mettler-Toledo. Modification of the circuit structure or components may cause damage to property, injury to persons, or death.

Notes

1. For panels requiring UL 508A, clearly label main disconnect and all circuit breakers and fuses with their values.

Grounding

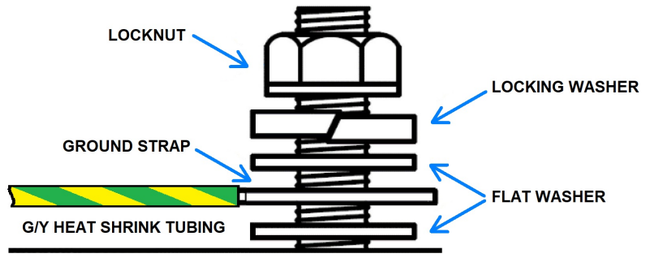

METTLER TOLEDO
SAFELINE Metal Detection
Mettler-Toledo Product Inspection
1571 Northpointe Parkway
Lutz, FL 33558
Main: (813) 889-9500
Fax: (813) 881-0840
24/7 Support: (800) 447-4439
www.mt.com/pi

This drawing and any design, development, invention, or copyright which it may embody or represent are the sole property of Mettler-Toledo. This drawing may not be copied in whole or in part, nor any subject matter shwn herein be manufactured, without the prior express written consent from an authorized agent of Mettler-Toledo.
This safety circuit diagram is an outcome of a comprehensive risk assesment and qualification of the circuit components and architecture. This safety circuit should not be modified in any manner at any time without the express written consent of Mettler-Toledo. Modification of the circuit structure or components may cause damage to property, injury to persons, or death.

Project Name: EPL010605	Project Number: EPL010605	Change	6/23/2023	Assembly ID: 30916892 A	ECN No.
Project Description: M34R V5 Metal Detector SL1500		Drawn: E. Ymeraj	9/13/2023	Function	Scale: 1 : 1
Variant Description: Enclosure, EAC,Main SL1500, EL_ENC_B		Checked: D. Doyle	9/13/2023	Mounting Location / Project Status	Format: ANSI A
Page Description: General Info		Document Type: Electrical Schematic		DCC: &EFS1 / Project Rev: A	Page: 3 / 16

Parts List

PIUS.SL.SUM_LIST.F02.R09

Assembly	Device tag	Qty	UoM	ERP Number	Descripttion	Page No.
Enclosure, EAC,Main SL1500, EL_ENC_B		1	each	28218362	Plug,Vent/M12/0.5"L/Black/Nylon/UL	5
Enclosure, EAC,Main SL1500, EL_ENC_B		1	each	28218361	Fitting,Conduit/Locknut/M12/Vent/Nylon	5
Enclosure, EAC,Main SL1500, EL_ENC_B		1	each	28216936	Assy, Enclosure/All-In-One	5
Enclosure, EAC,Main SL1500, EL_ENC_B	F1	1	each	28243635	Circuit Breaker,15A,C-curve,2Pole,UL489	5
Enclosure, EAC,Main SL1500, EL_ENC_B	F2	1	each	66079616	Circuit Breaker,6A,C-curve,2 Pole,UL489	5
Enclosure, EAC,Main SL1500, EL_ENC_B	F3	1	each	66079621	Circuit Breaker,13A,C-curve,2Pole,UL489	5
Enclosure, EAC,Main SL1500, EL_ENC_B	K1	1	each	66048210	Relay,SPDT/24V/Phoenix	8
Enclosure, EAC,Main SL1500, EL_ENC_B	KFD1	1	each	30332717	Safety Controller,4 input 4 output	6
Enclosure, EAC,Main SL1500, EL_ENC_B	Q1	1	each	30520365	Isolator Base Mounted,32A,3 pole	5
Enclosure, EAC,Main SL1500, EL_ENC_B	Q1	1	each	28217661	Kit,Shaft/Bezel Adapter/Metal/041-6063	5
Enclosure, EAC,Main SL1500, EL_ENC_B	Q1	1	each	28217684	Handle,Disconnect/Oper/Lockable/Disc/AB	5
Enclosure, EAC,Main SL1500, EL_ENC_B	Q1	1	each	30877306	NFPA, Internal Handle (Mod)(All in One)	5
Enclosure, EAC,Main SL1500, EL_ENC_B	Q1	1	each	30528328	Gasket, IP69/for AB Disconnect 28242960	5
Enclosure, EAC,Main SL1500, EL_ENC_B	R1	1	each	28264575	Potentiometer,1K/IP69/Schneider	7
Enclosure, EAC,Main SL1500, EL_ENC_B	RFA1	1	each	28320465	Power Supply,Filter,2ST,16A,Schaffner	5
Enclosure, EAC,Main SL1500, EL_ENC_B	RFA1	1	each	28282215	Plate, Mount/AIO/Filter	5
Enclosure, EAC,Main SL1500, EL_ENC_B	RFB1 ...RFB3	3	each	28120001	Ferrite,380 Ohm,19Dia	5;6
Enclosure, EAC,Main SL1500, EL_ENC_B	S1	1	each	28101096	Pushbutton,Multi-headed ZB4 BA7121	7
Enclosure, EAC,Main SL1500, EL_ENC_B	S1	1	each	28218295	Pushbutton,Boot/Rubber/22mm	7
Enclosure, EAC,Main SL1500, EL_ENC_B	S1 ;S3	2	each	28120014	Block,Mounting,ZB4 BZ009	7
Enclosure, EAC,Main SL1500, EL_ENC_B	S1 ;S3	3	each	28120012	Block,1 x N/O Contact,ZBE101	6;7
Enclosure, EAC,Main SL1500, EL_ENC_B	S2	1	each	28120011	Block,1 x N/C Contact,ZBE102	7
Enclosure, EAC,Main SL1500, EL_ENC_B	S3	1	each	30399462	Keyswitch,2 Position,IP69 Spring Rtn	7

Assembly	Device tag	Qty	UoM	ERP Number	Descripttion	Page No.
Enclosure, EAC,Main SL1500, EL_ENC_B	TA1	1	each	28263800	Control,V/S/1.0HP/D700/115/1-220/3	5
Enclosure, EAC,Main SL1500, EL_ENC_B	TBA1	1	each	28217685	Power Supply,24VDC/60W/2.5A	5
Enclosure, EAC,Main SL1500, EL_ENC_B	W99	1	each	28218322	Cord,Power/SJWC/9Ft/14/3AWG/15A/125V	5
Enclosure, EAC,Main SL1500, EL_ENC_B	WPE4	1	each	30715597	Strap,Ground,Bond,G/Y,300mm,6.5mm,UL467	5
Enclosure, EAC,Main SL1500, EL_ENC_B	WPE5	1	each	30715741	Strap,Ground,Bond,G/Y,150mm,6.5mm,UL467	5
Enclosure, EAC,Main SL1500, EL_ENC_B	X1	5	each	28326941	Block,Terminal,5.2mm,Feed through	10
Enclosure, EAC,Main SL1500, EL_ENC_B	X1	3	each	30420780	Terminal,End cover,D-ST 2,5	10
Enclosure, EAC,Main SL1500, EL_ENC_B	X2 ...X4	21	each	30378288	Terminal,Push-in,DB Level,0.14 - 4mm	10
Enclosure, EAC,Main SL1500, EL_ENC_B	XU	11	each	30476101	Terminal,End Clamp,CLIPFIX 35-5	10
Enclosure, EAC,Main SL1500, EL_ENC_B	XU	3	each	30389684	Terminal,End cover,PTTB 2.5	10
Enclosure, EAC,Main SL1500, EL_ENC_B	XE1	1	each	28217660	Lug, Grounding/Aluminum	5
Enclosure, EAC,Main SL1500, EL_ENC_B	XE2	1	each	28218378	Kit, Ground Bar/5 Terminal/2.54"L	5
Kit, EAC,Mechanical Misc SL1500	B1	1	each	24106343	Lightbarrier O6P-FPKG/AS/4P	9
Kit, EAC,Mechanical Misc SL1500	B1	1	each	24100158	Reflector,LBR RF7106023	9
Kit, EAC,Mechanical Misc SL1500	B2	1	each	28218159	Sensor,Inductive,PNP,12-48VDC,M12	9
Kit, EAC,Mechanical Misc SL1500	ESD1	1	each	30761990	Enclosure, EAC, E-Stop IP69	6
Kit, EAC,Mechanical Misc SL1500	PJ1	1	each	28279046	Beacon,BASE,24VDC,D60MM,WHITE,5M CABLE	8
Kit, EAC,Mechanical Misc SL1500	PJ1-P2	1	each	28254280	Lamp,Patlite/LR6/Red/Module	8
Kit, EAC,Mechanical Misc SL1500	PJ1-P6	1	each	28254398	Horn,Stacklight/White/Patlite	8
Kit, EAC,Mechanical Misc SL1500	W14	1	each	30517856	Cable,Sensor,IP69k,M8,Straight	9
Kit, EAC,Mechanical Misc SL1500	W15	1	each	28218277	Cable,Photoeye/4-Pin/Euro/90Deg/5mL	9

METTLER TOLEDO
SAFELINE
Metal Detection

Mettler-Toledo Product Inspection
1571 Northpointe Parkway
Lutz, FL 33558

Main: (813) 889-9500
Fax: (813) 881-0840
24/7 Support: (800) 447-4439
www.mt.com/pi

This drawing and any design, development, invention, or copyright which it may embody or represent are the sole property of Mettler-Toledo. This drawing may not be copied in whole or in part, nor any subject matter shwn herein be manufactured, without the prior express written consent from an authorized agent of Mettler-Toledo.
This safety circuit diagram is an outcome of a comprehensive risk assesment and qualification of the circuit components and architecture. This safety circuit should not be modified in any manner at any time without the express written consent of Mettler-Toledo. Modification of the circuit structure or components may cause damage to property, injury to persons, or death.

Project Name: EPL010605	Project Number: EPL010605	Change:	9/26/2023	Assembly ID: 30916892 A	ECN No.
Project Description: M34R V5 Metal Detector SL1500		Drawn: E. Ymeraj	9/13/2023	Function	Scale: 1 : 1
Variant Description: Enclosure, EAC,Main SL1500, EL_ENC_B		Checked: D. Doyle	9/13/2023	Mounting Location / Project Status	Format: ANSI A
Page Description: Parts List		Document Type: Electrical Schematic		DCC: &EFS1 / Project Rev: A	Page: 4 / 16

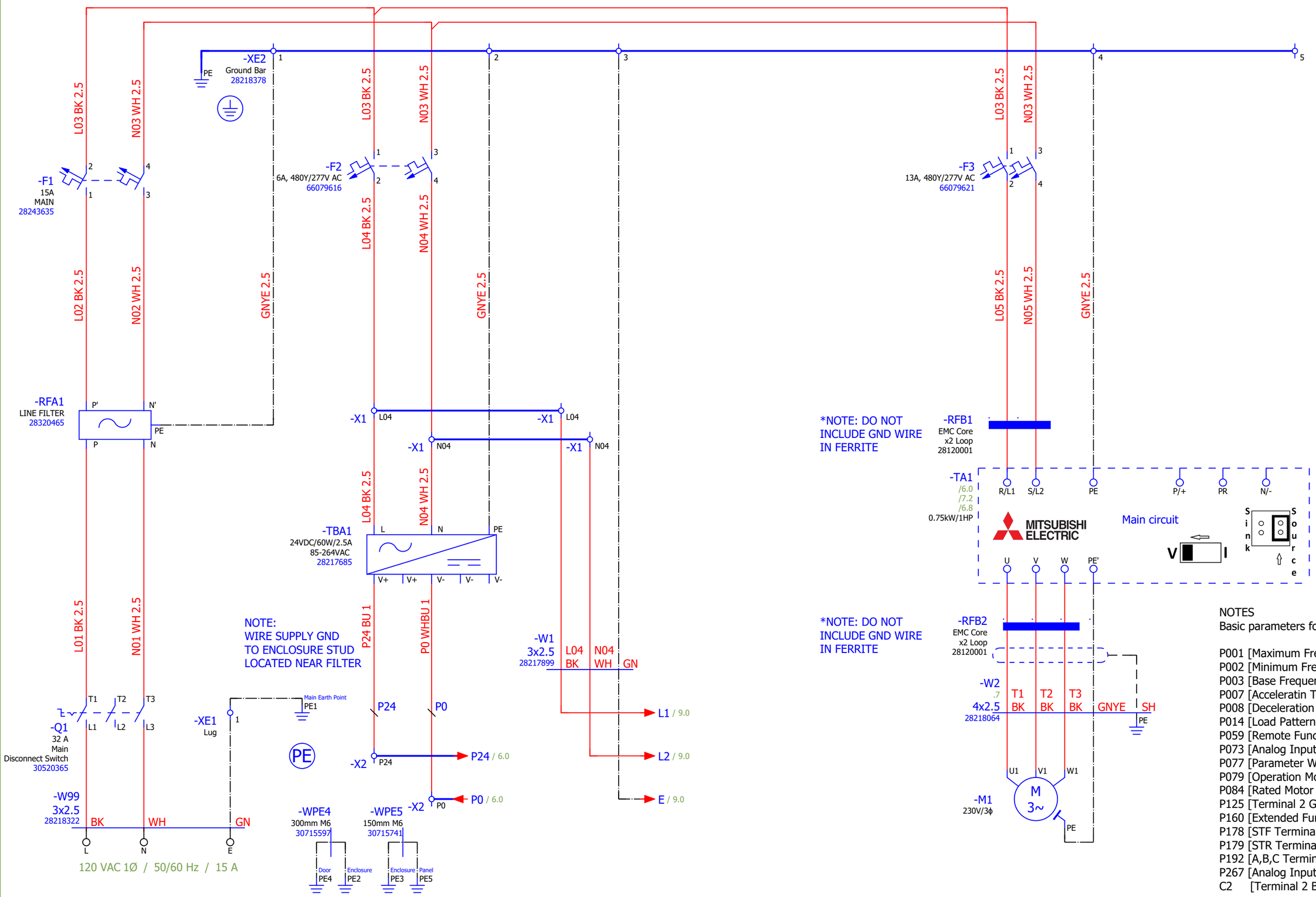

NOTES
Basic parameters for Mitsubishi D700:

P001 [Maximum Frequency]- 120
P002 [Minimum Frequency]- Min Belt Speed
P003 [Base Frequency]- 60
P007 [Acceleratin Time] - 1
P008 [Deceleration Time - 1
P014 [Load Pattern Selection]- 1
P059 [Remote Function Selection]- 1
P073 [Analog Input Selection]- 1
P077 [Parameter Write Selection]- 2
P079 [Operation Mode Selection]- 2
P084 [Rated Motor Frequency]- 60
P125 [Terminal 2 Gain Frequency]- Max Belt Speed
P160 [Extended Function Display]- 0
P178 [STF Terminal Function]- 60
P179 [STR Terminal Function]-25
P192 [A,B,C Terminal Function]- 0
P267 [Analog Input Selection] - 1
C2 [Terminal 2 Bias Frequency]- Same as P002

AC Power Distribution

50119 / ACPD /115V /MD BCPD /All-in-one 28246936 /Conveyor + MD /9ft pwr cord /60W /VFD: 1HP(Mit)

METTLER TOLEDO
SAFELINE
Metal Detection

Mettler-Toledo Product Inspection
1571 Northpointe Parkway
Lutz, FL 33558

Main: (813) 889-9500
Fax: (813) 881-0840
24/7 Support: (800) 447-4439
www.mt.com/pi

This drawing and any design, development, invention, or copyright which it may embody or represent are the sole property of Mettler-Toledo. This drawing may not be copied in whole or in part, nor any subject matter shwn herein be manufactured, without the prior express written consent from an authorized agent of Mettler-Toledo.
This safety circuit diagram is an outcome of a comprehensive risk assesment and qualification of the circuit components and architecture. This safety circuit should not be modified in any manner at any time without the express written consent of Mettler-Toledo. Modification of the circuit structure or components may cause damage to property, injury to persons, or death.

Project Name: EPL010605	Project Number: EPL010605	Change	9/13/2023	Assembly ID: 30916892 A	ECN No.
Project Description: M34R V5 Metal Detector SL1500		Drawn: E. Ymeraj	9/13/2023	Function	Scale: 1 : 1
Variant Description: Enclosure, EAC,Main SL1500, EL_ENC_B		Checked: D. Doyle	9/13/2023	Mounting Location / Project Status	Format: ANSI A
Page Description: AC Power Distribution		Document Type: Electrical Schematic		DCC: &EFS1 / Project Rev: A	Page: 5 / 16

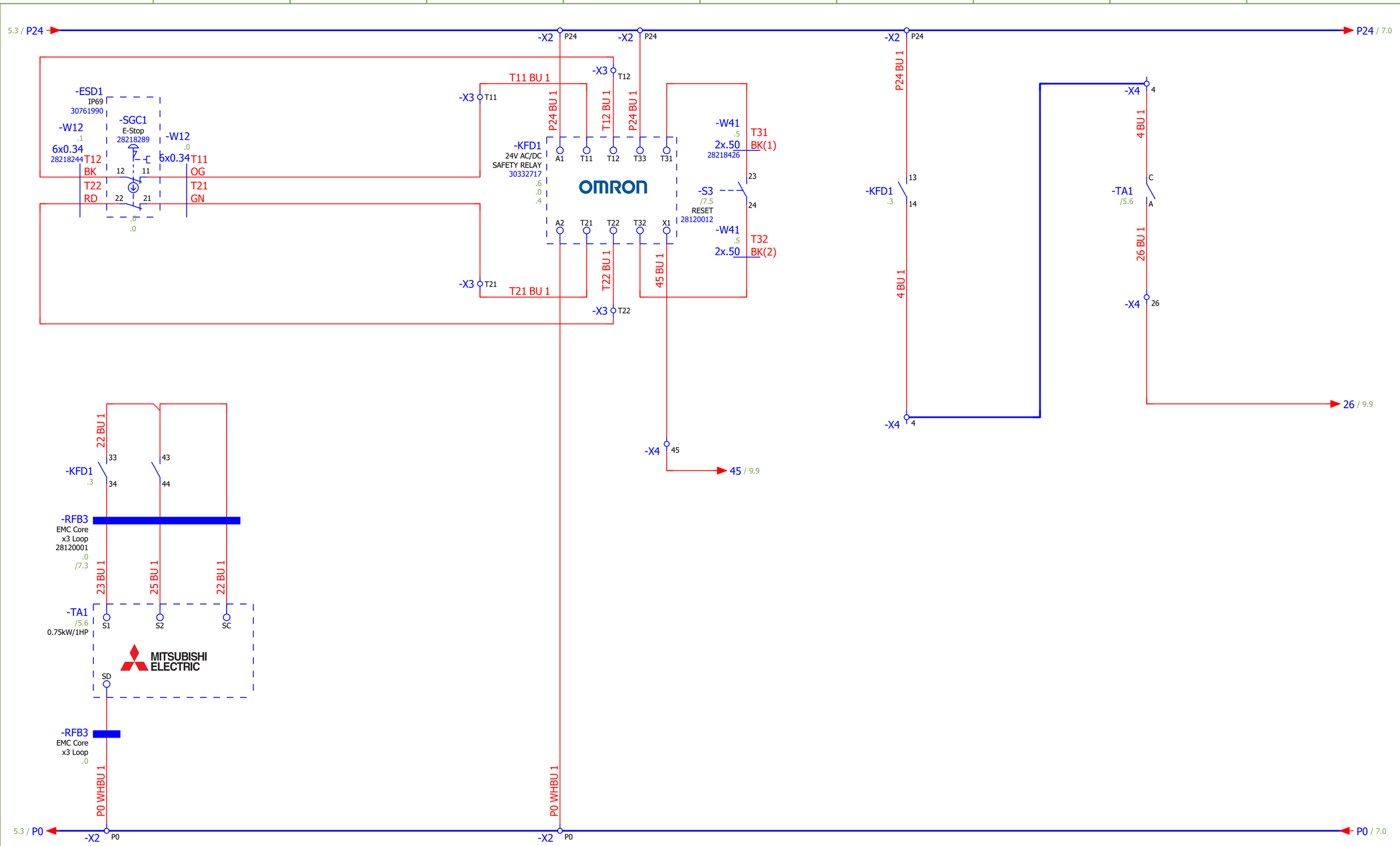

65007 / SC /CAT3(OMR) /OnIP69 /STO(Mit) /contact to S3 /IntPt(26,45)

Safety Evaluation : 28253424

Safety Circuit

METTLER TOLEDO

SAFELINE
Metal Detection

Mettler-Toledo Product Inspection
1571 Northpointe Parkway
Lutz, FL 33558

Main: (813) 889-9500
Fax: (813) 881-0840
24/7 Support: (800) 447-4439
www.mt.com/pi

This drawing and any design, development, invention, or copyright which it may embody or represent are the sole property of Mettler-Toledo. This drawing may not be copied in whole or in part, nor any subject matter shwn herein be manufactured, without the prior express written consent from an authorized agent of Mettler-Toledo.
This safety circuit diagram is an outcome of a comprehensive risk assesment and qualification of the circuit components and architecture. This safety circuit should not be modified in any manner at any time without the express written consent of Mettler-Toledo. Modification of the circuit structure or components may cause damage to property, injury to persons, or death.

Project Name: EPL010605	Project Number: EPL010605	Change	9/14/2023	Assembly ID: 30916892 A	ECN No.
Project Description: M34R V5 Metal Detector SL1500		Drawn: E. Ymeraj	9/13/2023	Function	Scale: 1 : 1
Variant Description: Enclosure, EAC,Main SL1500, EL_ENC_B		Checked: D. Doyle	9/13/2023	Mounting Location / Project Status	Format: ANSI A
Page Description: Safety Circuit		Document Type: Electrical Schematic		DCC: &EFS1 / Project Rev: A	Page: 6 / 16

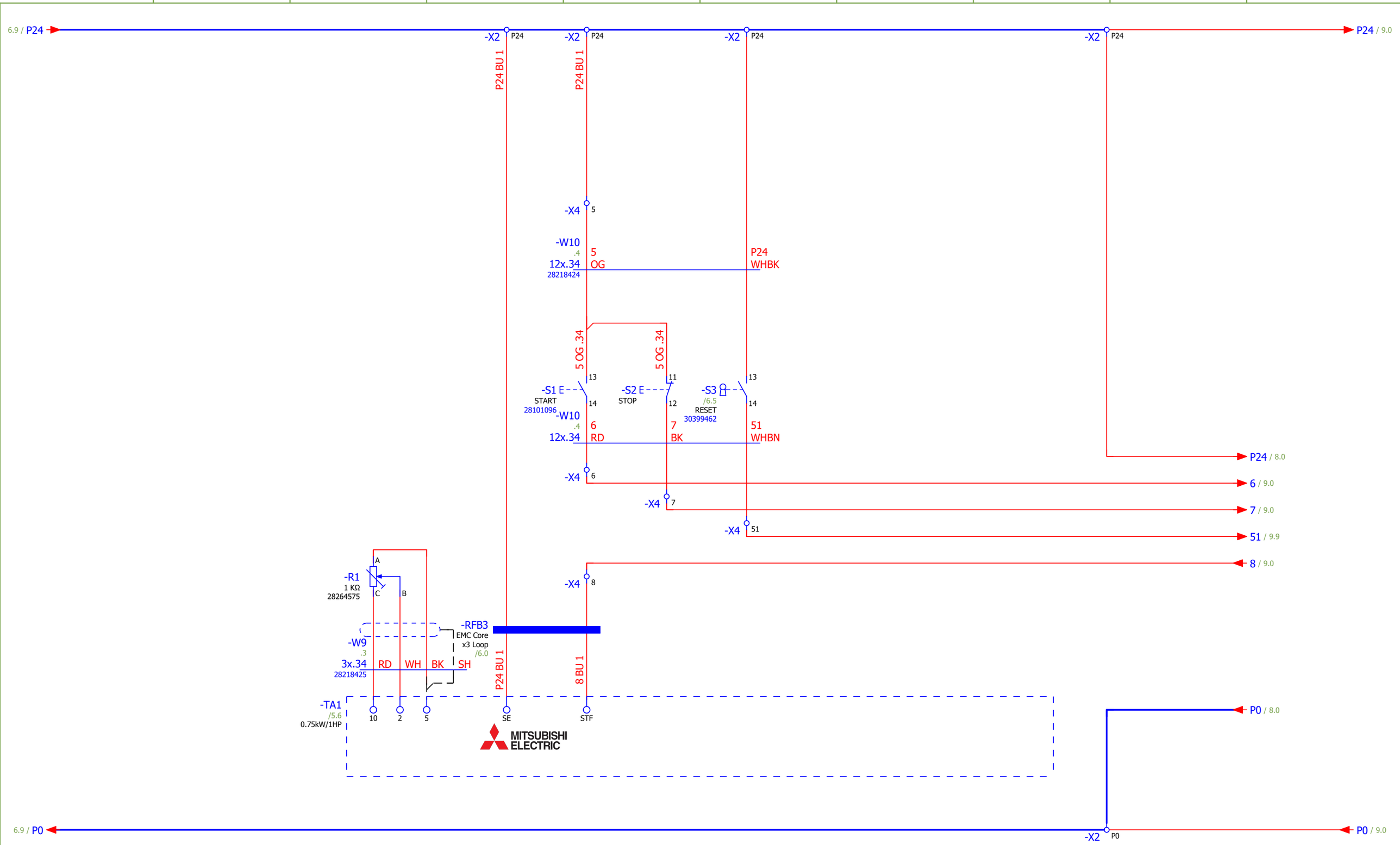

Control Circuits

75055 / CTRL /Start/Stop (SCH) />Pot IP69K (SCH) /Key on Enc /Patlite LR6 IP69 /Red R /D /IntPt(P24,P0,6,7,8,29,37,51)

METTLER TOLEDO

SAFELINE
Metal Detection

Mettler-Toledo Product Inspection
1571 Northpointe Parkway
Lutz, FL 33558

Main: (813) 889-9500
Fax: (813) 881-0840
24/7 Support: (800) 447-4439
www.mt.com/pi

This drawing and any design, development, invention, or copyright which it may embody or represent are the sole property of Mettler-Toledo. This drawing may not be copied in whole or in part, nor any subject matter shwn herein be manufactured, without the prior express written consent from an authorized agent of Mettler-Toledo.
This safety circuit diagram is an outcome of a comprehensive risk assesment and qualification of the circuit components and architecture. This safety circuit should not be modified in any manner at any time without the express written consent of Mettler-Toledo. Modification of the circuit structure or components may cause damage to property, injury to persons, or death.

Project Name: EPL010605	Project Number: EPL010605	Change	9/14/2023	Assembly ID: 30916892 A	ECN No.
Project Description: M34R V5 Metal Detector SL1500		Drawn: E. Ymeraj	9/13/2023	Function	Scale: 1 : 1
Variant Description: Enclosure, EAC,Main SL1500, EL_ENC_B		Checked: D. Doyle	9/13/2023	Mounting Location / Project Status	Format: ANSI A
Page Description: Control Circuits		Document Type: Electrical Schematic		DCC: &EFS1 / Project Rev: A	Page: 7 / 16

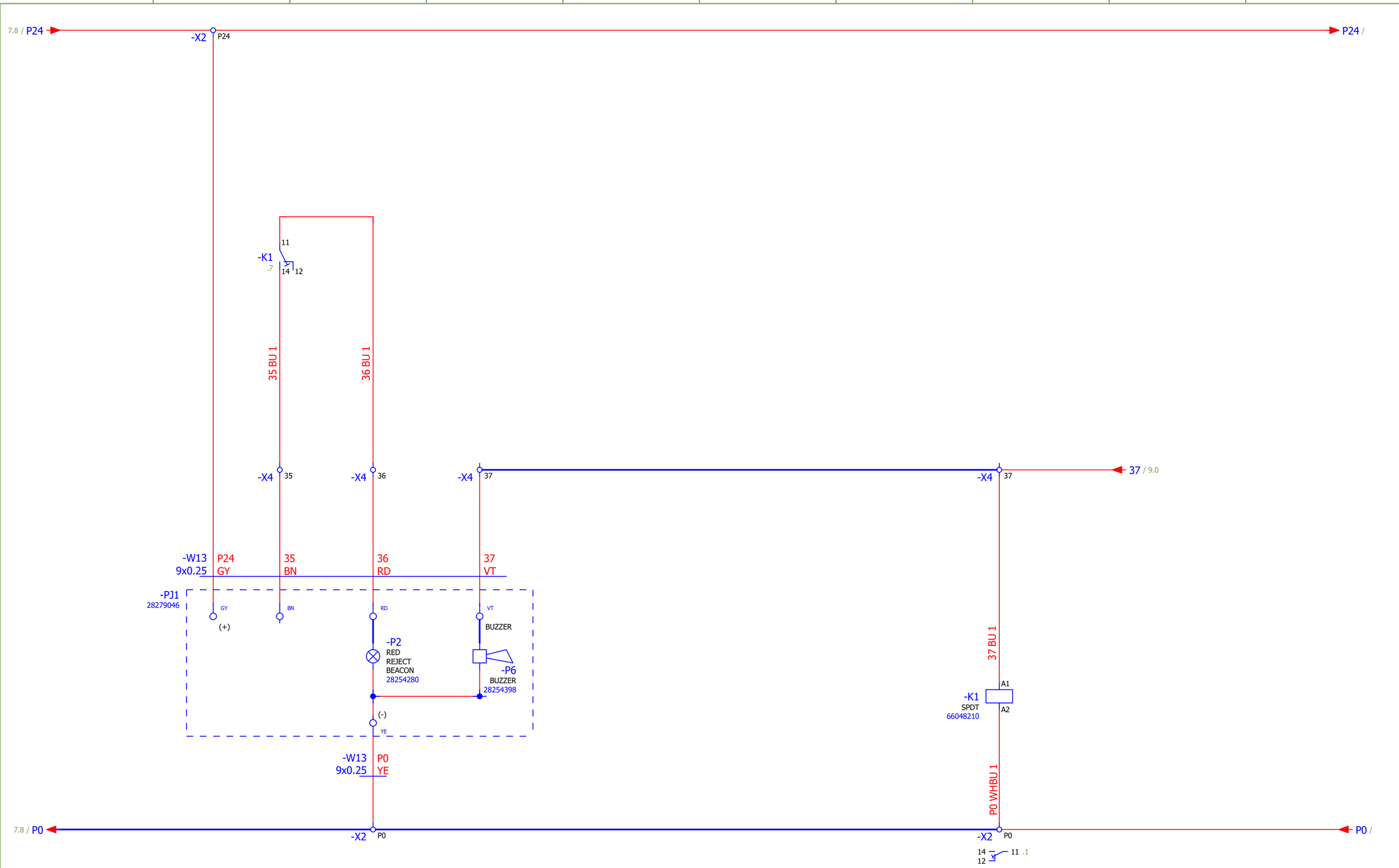

Control Circuits

75007 / CTRL /Start/Stop (SCH) /PB on Enc /Patlite LR6 IP69 /Red D /D /IntPt(P24,P0,6,7,8,29,37,51)

METTLER TOLEDO

SAFELINE
Metal Detection

Mettler-Toledo Product Inspection
1571 Northpointe Parkway
Lutz, FL 33558

Main: (813) 889-9500
Fax: (813) 881-0840
24/7 Support: (800) 447-4439
www.mt.com/pi

This drawing and any design, development, invention, or copyright which it may embody or represent are the sole property of Mettler-Toledo. This drawing may not be copied in whole or in part, nor any subject matter shwn herein be manufactured, without the prior express written consent from an authorized agent of Mettler-Toledo.
This safety circuit diagram is an outcome of a comprehensive risk assesment and qualification of the circuit components and architecture. This safety circuit should not be modified in any manner at any time without the express written consent of Mettler-Toledo. Modification of the circuit structure or components may cause damage to property, injury to persons, or death.

Project Name: EPL010605	Project Number: EPL010605	Change	9/26/2023	Assembly ID: 30916892 A	ECN No.
Project Description: M34R V5 Metal Detector SL1500		Drawn: E. Ymeraj	9/13/2023	Function	Scale: 1 : 1
Variant Description: Enclosure, EAC,Main SL1500, EL_ENC_B		Checked: D. Doyle	9/13/2023	Mounting Location / Project Status	Format: ANSI A
Page Description: Control Circuits		Document Type: Electrical Schematic		DCC: &EFS1 / Project Rev: A	Page: 8 / 16

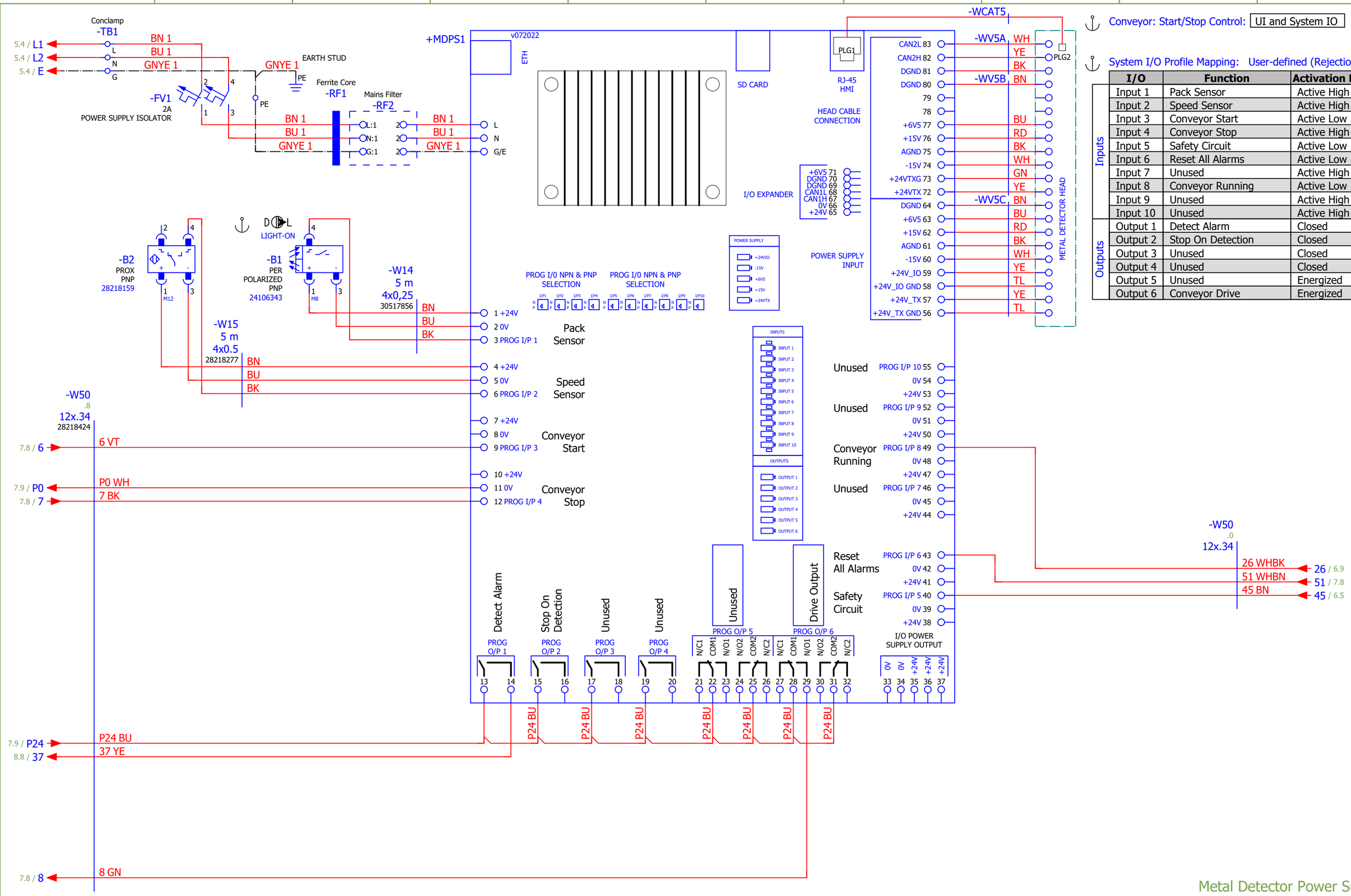

Conveyor: Start/Stop Control: UI and System IO

System I/O Profile Mapping: User-defined (Rejection 3)

	I/O	Function	Activation Level
Inputs	Input 1	Pack Sensor	Active High
	Input 2	Speed Sensor	Active High
	Input 3	Conveyor Start	Active Low
	Input 4	Conveyor Stop	Active High
	Input 5	Safety Circuit	Active Low
	Input 6	Reset All Alarms	Active Low
	Input 7	Unused	Active High
	Input 8	Conveyor Running	Active Low
	Input 9	Unused	Active High
	Input 10	Unused	Active High
Outputs	Output 1	Detect Alarm	Closed
	Output 2	Stop On Detection	Closed
	Output 3	Unused	Closed
	Output 4	Unused	Closed
	Output 5	Unused	Energized
	Output 6	Conveyor Drive	Energized

Metal Detector Power Supply

85006 / MDPS /V5 /Standard /PS >PER (IFM) + M8 Cable /SP Prox (SCH) + 5m Cable /I3 > Safety Circuit /> Reset All Alarms /> Detect /> Stop on Detect /IntPt(26,45) /IntPt(P24,P0,6,7,8,29,37,51)

METTLER TOLEDO

SAFELINE
Metal Detection

Mettler-Toledo Product Inspection
1571 Northpointe Parkway
Lutz, FL 33558

Main: (813) 889-9500
Fax: (813) 881-0840
24/7 Support: (800) 447-4439
www.mt.com/pi

This drawing and any design, development, invention, or copyright which it may embody or represent are the sole property of Mettler-Toledo. This drawing may not be copied in whole or in part, nor any subject matter shwn herein be manufactured, without the prior express written consent from an authorized agent of Mettler-Toledo.
This safety circuit diagram is an outcome of a comprehensive risk assesment and qualification of the circuit components and architecture. This safety circuit should not be modified in any manner at any time without the express written consent of Mettler-Toledo. Modification of the circuit structure or components may cause damage to property, injury to persons, or death.

Project Name: EPL010605	Project Number: EPL010605	Change	9/26/2023	Assembly ID: 30916892 A	ECN No.
Project Description: M34R V5 Metal Detector SL1500		Drawn: E. Ymeraj	9/13/2023	Function	Scale: 1 : 1
Variant Description: Enclosure, EAC,Main SL1500, EL_ENC_B		Checked: D. Doyle	9/13/2023	Mounting Location / Project Status	Format: ANSI A
Page Description: Metal Detector Power Supply		Document Type: Electrical Schematic		DCC: &EFS1 / Project Rev: A	Page: 9 / 16

NOTE:
Circuit Breakers shown are A-B 1492-M Series.
Regardless of brand, verify terminal 1 is upwards.

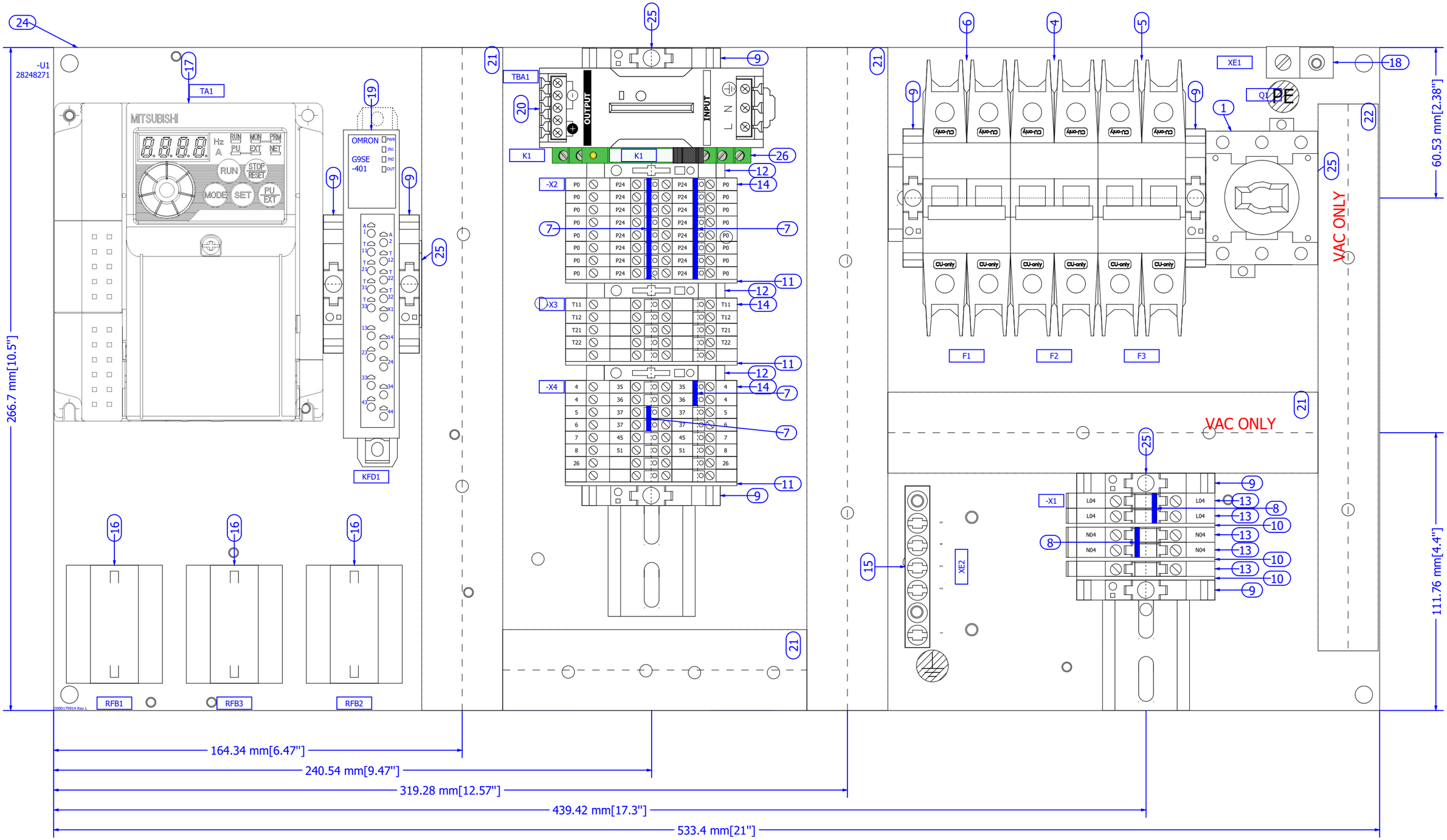

Panel Layout

125014 / Complete /115V /All-in-one 28246936 /Conveyor + MD /60W /VFD: 1HP(Mit) /CAT3(OMR) /STO(Mit) /contact to S3 /IntPt(26,45) /Start/Stop (SCH) />Pot 4X (A-B) /PB on Enc /Patlite LR6 IP69 /Red R /D /IntPt(P24,P0,6,7,8,29,37,51) /Standard

METTLER TOLEDO

SAFELINE
Metal Detection

Mettler-Toledo Product Inspection
1571 Northpointe Parkway
Lutz, FL 33558

Main: (813) 889-9500
Fax: (813) 881-0840
24/7 Support: (800) 447-4439
www.mt.com/pi

This drawing and any design, development, invention, or copyright which it may embody or represent are the sole property of Mettler-Toledo. This drawing may not be copied in whole or in part, nor any subject matter shwn herein be manufactured, without the prior express written consent from an authorized agent of Mettler-Toledo.
This safety circuit diagram is an outcome of a comprehensive risk assesment and qualification of the circuit components and architecture. This safety circuit should not be modified in any manner at any time without the express written consent of Mettler-Toledo. Modification of the circuit structure or components may cause damage to property, injury to persons, or death.

Project Name: EPL010605	Project Number: EPL010605	Change	9/26/2023	Assembly ID: 30916892 A	ECN No.
Project Description: M34R V5 Metal Detector SL1500		Drawn: E. Ymeraj	9/13/2023	Function	Scale: 2 : 3
Variant Description: Enclosure, EAC,Main SL1500, EL_ENC_B		Checked: D. Doyle	9/13/2023	Mounting Location / Project Status	Format: ANSI A
Page Description: Panel Layout		Document Type: Electrical Schematic		DCC: &EFS1 / Project Rev: A	Page: 10 / 16

PIUS.SL.ITEM_LEG.F02.R05

Item Legend

Item Number	Device tag	MFG Number	Qty	UoM	ERP Number	Descripttion	Torque Spec
1	Q1	194E-A32-1753	1	each	30520365	Isolator Base Mounted,32A,3 pole	
	Q1	194E-NS-P	1	each	28217661	Kit,Shaft/Bezel Adapter/Metal/041-6063	
	Q1	194R-PY	1	each	28217684	Handle,Disconnect/Oper/Lockable/Disc/AB	
4	F2	2907588	1	each	66079616	Circuit Breaker,6A,C-curve,2 Pole,UL489	17.7 lb-in
5	F3	2907593	1	each	66079621	Circuit Breaker,13A,C-curve,2Pole,UL489	17.7 lb-in
6	F1	2907594	1	each	28243635	Circuit Breaker,15A,C-curve,2Pole,UL489	17.7 lb-in
15	XE2	GBK5	1	each	28218378	Kit, Ground Bar/5 Terminal/2.54"L	20
16	RFB1...RFB3	0431176451	3	each	28120001	Ferrite,380 Ohm,19Dia	
		3582VB	1	each	28218362	Plug,Vent/M12/0.5"L/Black/Nylon/UL	
		M9130	1	each	28218361	Fitting,Conduit/Locknut/M12/Vent/Nylon	
	RFA1	28282215	1	each	28282215	Plate, Mount/AIO/Filter	
	Q1	30877306	1	each	30877306	NFPA, Internal Handle (Mod)(All in One)	
17	TA1	FR-D710W-042-NA	1	each	28263800	Control,V/S/1.0HP/D700/115/1-220/3	13.3 lb-in
18	XE1	6920K21	1	each	28217660	Lug, Grounding/Aluminum	50 in-lb
	Q1	30528328	1	each	30528328	Gasket, IP69/for AB Disconnect 28242960	
	WPE5	563607	1	each	30715741	Strap,Ground,Bond,G/Y,150mm,6.5mm,UL467	
	WPE4	563611	1	each	30715597	Strap,Ground,Bond,G/Y,300mm,6.5mm,UL467	
19	KFD1	G9SE-401 DC24	1	each	30332717	Safety Controller,4 input 4 output	
20	TBA1	S8VK-G06024	1	each	28217685	Power Supply,24VDC/60W/2.5A	
21		F1X2LG6	4	M	28218460	Wireway, 1.0"W x 2.0"H/6'L	
22		75X1.5LG6	1	M	28218464	Wireway, 0.75"W x 1.5"H/6'L	
26	K1	2966171	1	each	66048210	Relay,SPDT/24V/Phoenix	5-7 lb-in
9;12	XU	3022276	11	each	30476101	Terminal,End Clamp,CLIPFIX 35-5	
7;8	XU	3030213	6	each	30528230	Jumper,Plug-in,Bridge,5mm,10 Position	
10	X1	3030417	3	each	30420780	Terminal,End cover,D-ST 2,5	
13	X1	3209510	5	each	28326941	Block,Terminal,5.2mm,Feed through	
14	X2...X4	3210567	21	each	30378288	Terminal,Push-in,DB Level,0.14 - 4mm	
11	XU	3211634	3	each	30389684	Terminal,End cover,PTTB 2.5	
	RFA1	FN2070A-16-06	1	each	28320465	Power Supply,Filter,2ST,16A,Schaffner	
	R1	XB4BD912R1K	1	each	28264575	Potentiometer,1K/IP69/Schneider	
	S1	ZB4BA7121	1	each	28101096	Pushbutton,Multi-headed ZB4 BA7121	
	S3	ZB4BG6	1	each	30399462	Keyswitch,2 Position,IP69 Spring Rtn	
	S1;S3	ZB4BZ009	2	each	28120014	Block,Mounting,ZB4 BZ009	
	S1	ZBA710	1	each	28218295	Pushbutton,Boot/Rubber/22mm	
	S1;S3	ZBE101	3	each	28120012	Block,1 x N/O Contact,ZBE101	
	S2	ZBE102	1	each	28120011	Block,1 x N/C Contact,ZBE102	
		28216936	1	each	28216936	Assy, Enclosure/All-In-One	
24	U1	28216936	1	each	28248271	Electrical Component Mtg Plate, All in 1	

Item Number	Device tag	MFG Number	Qty	UoM	ERP Number	Descripttion	Torque Spec
25	XU	0514500000	4	M	28218430	DIN RAIL 35MMX7.5MM SLOTTED 2M	

Item Legend

METTLER TOLEDO
SAFELINE
Metal Detection

Mettler-Toledo Product Inspection
1571 Northpointe Parkway
Lutz, FL 33558

Main: (813) 889-9500
Fax: (813) 881-0840
24/7 Support: (800) 447-4439
www.mt.com/pi

This drawing and any design, development, invention, or copyright which it may embody or represent are the sole property of Mettler-Toledo. This drawing may not be copied in whole or in part, nor any subject matter shwn herein be manufactured, without the prior express written consent from an authorized agent of Mettler-Toledo.
This safety circuit diagram is an outcome of a comprehensive risk assesment and qualification of the circuit components and architecture. This safety circuit should not be modified in any manner at any time without the express written consent of Mettler-Toledo. Modification of the circuit structure or components may cause damage to property, injury to persons, or death.

Project Name: EPL010605	Project Number: EPL010605	Change	9/26/2023	Assembly ID: 30916892 A	ECN No.
Project Description: M34R V5 Metal Detector SL1500		Drawn: E. Ymeraj	9/13/2023	Function	Scale: 1 : 1
Variant Description: Enclosure, EAC,Main SL1500, EL_ENC_B		Checked: D. Doyle	9/13/2023	Mounting Location / Project Status	Format: ANSI A
Page Description: Item Legend		Document Type: Electrical Schematic		DCC: &EFS1 / Project Rev: A	Page: 11 / 16

Cable Connection List

Cable DT W99 ☐ Material 28218322 Description Cord,Power/SJWC/9Ft/14/3AWG/15A/125V Conductors / Cross-section 3x2.5 Cable length A/N

Cable Location	Label	Color	Cross-section	Target 1	/ Page.Column	Target 2	/ Page.Column	Remark
		BK	2.5		/5.0	-Q1:L1	/5.0	
		WH	2.5		/5.0	-Q1:L3	/5.0	
		GN	2.5		/5.1	-XE1:1	/5.1	

Cable DT WCAT5 ☐ Material Description Conductors / Cross-section Cable length A/N

Cable Location	Label	Color	Cross-section	Target 1	/ Page.Column	Target 2	/ Page.Column	Remark
				MDPS1 :PLG1	/9.6	:PLG2	/9.7	

Cable DT WV5A ☐ Material Description Conductors / Cross-section Cable length A/N

Cable Location	Label	Color	Cross-section	Target 1	/ Page.Column	Target 2	/ Page.Column	Remark
		BK		-MDPS1:81	/9.6		/9.7	
		WH		-MDPS1:83	/9.6		/9.7	
		YE		-MDPS1:82	/9.6		/9.7	

Cable DT WV5B ☐ Material Description Conductors / Cross-section Cable length A/N

Cable Location	Label	Color	Cross-section	Target 1	/ Page.Column	Target 2	/ Page.Column	Remark
		BK		-MDPS1:75	/9.6		/9.7	
		BN		-MDPS1:80	/9.6		/9.7	
		BU		-MDPS1:77	/9.6		/9.7	
		GN		-MDPS1:73	/9.6		/9.7	
		RD		-MDPS1:76	/9.6		/9.7	
		WH		-MDPS1:74	/9.6		/9.7	
		YE		-MDPS1:72	/9.6		/9.7	

Cable DT WV5C ☐ Material Description Conductors / Cross-section Cable length A/N

Cable Location	Label	Color	Cross-section	Target 1	/ Page.Column	Target 2	/ Page.Column	Remark
		BK		-MDPS1:61	/9.6		/9.7	
		BN		-MDPS1:64	/9.6		/9.7	
		BU		-MDPS1:63	/9.6		/9.7	
		RD		-MDPS1:62	/9.6		/9.7	
		TL		-MDPS1:58	/9.6		/9.7	
		TL		-MDPS1:56	/9.6		/9.7	
		WH		-MDPS1:60	/9.6		/9.7	
		YE		-MDPS1:59	/9.6		/9.7	
		YE		-MDPS1:57	/9.6		/9.7	

☑ = Cable connections terminated ☐ = Add cable connection

METTLER TOLEDO
SAFELINE Metal Detection
Mettler-Toledo Product Inspection
1571 Northpointe Parkway
Lutz, FL 33558
Main: (813) 889-9500
Fax: (813) 881-0840
24/7 Support: (800) 447-4439
www.mt.com/pi

This drawing and any design, development, invention, or copyright which it may embody or represent are the sole property of Mettler-Toledo. This drawing may not be copied in whole or in part, nor any subject matter shwn herein be manufactured, without the prior express written consent from an authorized agent of Mettler-Toledo.
This safety circuit diagram is an outcome of a comprehensive risk assesment and qualification of the circuit components and architecture. This safety circuit should not be modified in any manner at any time without the express written consent of Mettler-Toledo. Modification of the circuit structure or components may cause damage to property, injury to persons, or death.

Project Name: EPL010605	Project Number: EPL010605	Change	9/26/2023	Assembly ID: 30916892 A	ECN No.
Project Description: M34R V5 Metal Detector SL1500		Drawn: E. Ymeraj	9/13/2023	Function	Scale: 1 : 1
Variant Description: Enclosure, EAC,Main SL1500, EL_ENC_B		Checked: D. Doyle	9/13/2023	Mounting Location / Project Status	Format: ANSI A
Page Description: Cable Connection List		Document Type: Electrical Schematic		DCC: &EFS1 / Project Rev: A	Page: 12 / 16

Cable Connection List

Cable DT	Material	Description	Conductors / Cross-section	Cable length
W1 ☐	28217899	Cable,Power/14AWG/3-Cond/Wet or Dry	3x2.5	A/N

Cable Location	Label	Color	Cross-section	Target 1	/ Page.Column	Target 2	/ Page.Column	Remark
	L04	BK	2.5	-X1:L04	/5.3	MDPS1 -TB1:L	/9.0	
	N04	WH	2.5	-X1:N04	/5.3	MDPS1 -TB1:N	/9.0	
		GN	2.5	-XE2:3	/5.4	MDPS1 -TB1:G	/9.0	

Cable DT	Material	Description	Conductors / Cross-section	Cable length
W2 ☐	28218064	Cable,VFD/Shielded/14/4	4x2.5	A/N

Cable Location	Label	Color	Cross-section	Target 1	/ Page.Column	Target 2	/ Page.Column	Remark
	T1	BK	2.5	-TA1:U	/5.6	-M1:U1	/5.6	x2 Loops @RFB2
	T2	BK	2.5	-TA1:V	/5.6	-M1:V1	/5.6	x2 Loops @RFB2
	T3	BK	2.5	-TA1:W	/5.7	-M1:W1	/5.6	x2 Loops @RFB2
		GNYE	2.5	-TA1:PE'	/5.7	-M1:PE	/5.6	
		SH	2.5					
		SH		-W2	/5.6	:PE	/5.7	

Cable DT	Material	Description	Conductors / Cross-section	Cable length
W50 ☐	28218424	Cable,22AWG/12 Conductors/Sheilded	12x.34	A/N

Cable Location	Label	Color	Cross-section	Target 1	/ Page.Column	Target 2	/ Page.Column	Remark
	7	BK	0.34	-X4:7	/7.4	-MDPS1:12	/9.3	
	45	BN	0.34	-X4:45	/6.4	-MDPS1:40	/9.6	
		RD	0.34					
		OG	0.34					
	37	YE	0.34	-X4:37	/8.7	-MDPS1:14	/9.3	
	8	GN	0.34	-X4:8	/7.4	-MDPS1:29	/9.5	
	P24	BU	0.34	-X2:P24	/7.7	-MDPS1:13	/9.3	
	6	VT	0.34	-X4:6	/7.4	-MDPS1:9	/9.3	
		GY	0.34					
	P0	WH	0.34	-X2:P0	/7.7	-MDPS1:11	/9.3	
	26	WHBK	0.34	-X4:26	/6.8	-MDPS1:49	/9.6	
	51	WHBN	0.34	-X4:51	/7.5	-MDPS1:43	/9.6	
		SH	0.34					

Cable DT	Material	Description	Conductors / Cross-section	Cable length
WPE4 ☐	30715597	Strap,Ground,Bond,G/Y,300mm,6.5mm,UL467		A/N

Cable Location	Label	Color	Cross-section	Target 1	/ Page.Column	Target 2	/ Page.Column	Remark
BEN1			10 mm²	:PE4	/5.2	:PE2	/5.2	

☑ = Cable connections terminated ☐ = Add cable connection

METTLER TOLEDO
SAFELINE Metal Detection
Mettler-Toledo Product Inspection
1571 Northpointe Parkway
Lutz, FL 33558
Main: (813) 889-9500
Fax: (813) 881-0840
24/7 Support: (800) 447-4439
www.mt.com/pi

This drawing and any design, development, invention, or copyright which it may embody or represent are the sole property of Mettler-Toledo. This drawing may not be copied in whole or in part, nor any subject matter shwn herein be manufactured, without the prior express written consent from an authorized agent of Mettler-Toledo.
This safety circuit diagram is an outcome of a comprehensive risk assesment and qualification of the circuit components and architecture. This safety circuit should not be modified in any manner at any time without the express written consent of Mettler-Toledo. Modification of the circuit structure or components may cause damage to property, injury to persons, or death.

Project Name: EPL010605 | Project Number: EPL010605 | Change: | 9/26/2023 | Assembly ID: 30916892 A | ECN No.:
Project Description: M34R V5 Metal Detector SL1500 | Drawn: E. Ymeraj | 9/13/2023 | Function: | Scale: 1 : 1
Variant Description: Enclosure, EAC,Main SL1500, EL_ENC_B | Checked: D. Doyle | 9/13/2023 | Mounting Location: | Project Status: | Format: ANSI A
Page Description: Cable Connection List | Document Type: Electrical Schematic | DCC: &EFS1 | Project Rev: A | Page: 13 / 16

Cable Connection List

PIUS.SL.CABLE_CON_LIST.R05

Cable DT	Material	Description	Conductors / Cross-section	Cable length
WPE5	30715741	Strap,Ground,Bond,G/Y,150mm,6.5mm,UL467		A/N

Cable Location	Label	Color	Cross-section	Target 1 / Page.Column	Target 2 / Page.Column	Remark
BEN1			10 mm²	:PE3 /5.2	:PE5 /5.2	

Cable DT	Material	Description	Conductors / Cross-section	Cable length
W9	28218425	Cable,AWG/22/3-Cond/Braided Shield	3x.34	A/N

Cable Location	Label	Color	Cross-section	Target 1 / Page.Column	Target 2 / Page.Column	Remark
BEN1		WH	.50	-R1:B /7.2	-TA1:2 /7.2	
=		BK	.50	-R1:A /7.2	-TA1:5 /7.3	
=		RD	.50	-R1:C /7.2	-TA1:10 /7.2	
=		SH	.34	BEN1 -W9 /7.2	-TA1:5 /7.3	

Cable DT	Material	Description	Conductors / Cross-section	Cable length
W10	28218424	Cable,22AWG/12 Conductors/Sheilded	12x.34	A/N

Cable Location	Label	Color	Cross-section	Target 1 / Page.Column	Target 2 / Page.Column	Remark
BEN1	7	BK	0.34	-X4:7 /7.4	-S2:12 /7.4	
=		BN	0.34			
=	6	RD	0.34	-X4:6 /7.4	-S1:14 /7.4	
=	5	OG	0.34	-S1:13 /7.4	-X4:5 /7.4	Double Ferrule
=		YE	0.34			
=		GN	0.34			
=		BU	0.34			
=		VT	0.34			
=		GY	0.34			
=		WH	0.34			
=	P24	WHBK	0.34	-X2:P24 /7.5	-S3:13 /7.5	
=	51	WHBN	0.34	-X4:51 /7.5	-S3:14 /7.5	
=		SH	0.34			

Cable DT	Material	Description	Conductors / Cross-section	Cable length
W12	28218244	Cable,AWG/22/6-Cond/TC/Pharm	6x0.34	A/N

Cable Location	Label	Color	Cross-section	Target 1 / Page.Column	Target 2 / Page.Column	Remark
BEN1	T12	BK	.34	-SGC1:12 /6.0	-X3:T12 /6.4	
=		WH	.34			
=	T22	RD	.34	-SGC1:22 /6.0	-X3:T22 /6.4	
=	T21	GN	.34	-SGC1:21 /6.0	-X3:T21 /6.3	
=	T11	OG	.34	-SGC1:11 /6.0	-X3:T11 /6.3	
=		BU	.34			

☑ = Cable connections terminated ☐ = Add cable connection

METTLER TOLEDO
SAFELINE Metal Detection
Mettler-Toledo Product Inspection
1571 Northpointe Parkway
Lutz, FL 33558
Main: (813) 889-9500
Fax: (813) 881-0840
24/7 Support: (800) 447-4439
www.mt.com/pi

This drawing and any design, development, invention, or copyright which it may embody or represent are the sole property of Mettler-Toledo. This drawing may not be copied in whole or in part, nor any subject matter shwn herein be manufactured, without the prior express written consent from an authorized agent of Mettler-Toledo.
This safety circuit diagram is an outcome of a comprehensive risk assesment and qualification of the circuit components and architecture. This safety circuit should not be modified in any manner at any time without the express written consent of Mettler-Toledo. Modification of the circuit structure or components may cause damage to property, injury to persons, or death.

Project Name: EPL010605	Project Number: EPL010605	Change	9/26/2023	Assembly ID: 30916892 A	ECN No.
Project Description: M34R V5 Metal Detector SL1500		Drawn: E. Ymeraj	9/13/2023	Function	Scale: 1 : 1
Variant Description: Enclosure, EAC,Main SL1500, EL_ENC_B		Checked: D. Doyle	9/13/2023	Mounting Location / Project Status	Format: ANSI A
Page Description: Cable Connection List		Document Type: Electrical Schematic		DCC: &EFS1 / Project Rev: A	Page: 14 / 16

Cable Connection List

Cable DT	Material	Description	Conductors / Cross-section	Cable length
W41	28218426	Cable,AWG/20/2-Cond/CC600	2x.50	A/N

Cable Location	Label	Color	Cross-section	Target 1	/ Page.Column	Target 2	/ Page.Column	Remark
BEN1	T31	BK(1)	.50	-KFD1:T31	/6.4	-S3:23	/6.5	
=	T32	BK(2)	.50	-KFD1:T32	/6.4	-S3:24	/6.5	

Cable DT	Material	Description	Conductors / Cross-section	Cable length
W14	30517856	Cable,Sensor,IP69k,M8,Straight	4x0,25	5 m

Cable Location	Label	Color	Cross-section	Target 1	/ Page.Column	Target 2	/ Page.Column	Remark
MDPS1		BN	0,25	-B1:1	/9.2	-MDPS1:1	/9.3	
=		WH	0,25					
=		BU	0,25	-B1:3	/9.2	-MDPS1:2	/9.3	
=		BK	0,25	-B1:4	/9.2	-MDPS1:3	/9.3	

Cable DT	Material	Description	Conductors / Cross-section	Cable length
W15	28218277	Cable,Photoeye/4-Pin/Euro/90Deg/5mL	4x0.5	5 m

Cable Location	Label	Color	Cross-section	Target 1	/ Page.Column	Target 2	/ Page.Column	Remark
MDPS1		BN	.5	-B2:1	/9.1	-MDPS1:4	/9.3	
=		WH	.5					
=		BU	.5	-B2:3	/9.1	-MDPS1:5	/9.3	
=		BK	.5	-B2:4	/9.1	-MDPS1:6	/9.3	

☑ = Cable connections terminated ☐ = Add cable connection

METTLER TOLEDO
SAFELINE
Metal Detection

Mettler-Toledo Product Inspection
1571 Northpointe Parkway
Lutz, FL 33558

Main: (813) 889-9500
Fax: (813) 881-0840
24/7 Support: (800) 447-4439
www.mt.com/pi

This drawing and any design, development, invention, or copyright which it may embody or represent are the sole property of Mettler-Toledo. This drawing may not be copied in whole or in part, nor any subject matter shwn herein be manufactured, without the prior express written consent from an authorized agent of Mettler-Toledo.
This safety circuit diagram is an outcome of a comprehensive risk assesment and qualification of the circuit components and architecture. This safety circuit should not be modified in any manner at any time without the express written consent of Mettler-Toledo. Modification of the circuit structure or components may cause damage to property, injury to persons, or death.

Project Name: EPL010605	Project Number: EPL010605	Change:	9/26/2023	Assembly ID: 30916892 A	ECN No.:
Project Description: M34R V5 Metal Detector SL1500		Drawn: E. Ymeraj	9/13/2023	Function:	Scale: 1 : 1
Variant Description: Enclosure, EAC,Main SL1500, EL_ENC_B		Checked: D. Doyle	9/13/2023	Mounting Location: / Project Status:	Format: ANSI A
Page Description: Cable Connection List		Document Type: Electrical Schematic		DCC: &EFS1 / Project Rev: A	Page: 15 / 16

Wire Connection List

Label		Color	Cross-section	Target 1	Target 2	Remark	/Page .Column
L01	☐	BK	2.5	Q1:T1	RFA1:P		/5.0
L02	☐	BK	2.5	RFA1:P'	F1:1		/5.0
L03	☐	BK	2.5	F1:2	F2:1	Double Ferrule	/5.0
L03	☐	BK	2.5	F2:1	F3:1	Double Ferrule	/5.2
N01	☐	WH	2.5	Q1:T3	RFA1:N		/5.0
N02	☐	WH	2.5	RFA1:N'	F1:3		/5.0
N03	☐	WH	2.5	F2:3	F1:4	Double Ferrule	/5.2
N03	☐	WH	2.5	F3:3	F2:3	Double Ferrule	/5.6
	☐	GNYE	2.5	XE2:1	RFA1:PE		/5.1
P24	☐	BU	1	X2:P24	TBA1:V+		/5.2
L04	☐	BK	2.5	X1:L04	TBA1:L		/5.2
L04	☐	BK	2.5	F2:2	X1:L04		/5.2
P0	☐	WHBU	1	TBA1:V-	X2:P0		/5.2
N04	☐	WH	2.5	TBA1:N	X1:N04		/5.2
N04	☐	WH	2.5	X1:N04	F2:4		/5.2
	☐	GNYE	2.5	TBA1:PE	XE2:2		/5.3
L05	☐	BK	2.5	F3:2	TA1:R/L1		/5.6
N05	☐	WH	2.5	F3:4	TA1:S/L2		/5.6
	☐	GNYE	2.5	TA1:PE	XE2:4		/5.7
P0	☐	WHBU	1	TA1:SD	X2:P0	x3 Loops @RFB3	/6.0
23	☐	BU	1	KFD1:34	TA1:S1	x3 Loops @RFB3	/6.0
22	☐	BU	1	KFD1:33	KFD1:43	Double Ferrule	/6.0
22	☐	BU	1	KFD1:43	TA1:SC	x3 Loops @RFB3	/6.1
25	☐	BU	1	KFD1:44	TA1:S2	x3 Loops @RFB3	/6.1
T21	☐	BU	1	X3:T21	KFD1:T21		/6.3
T11	☐	BU	1	X3:T11	KFD1:T11		/6.3
P0	☐	WHBU	1	KFD1:A2	X2:P0		/6.3
P24	☐	BU	1	X2:P24	KFD1:A1		/6.3
T22	☐	BU	1	KFD1:T22	X3:T22		/6.4
T12	☐	BU	1	X3:T12	KFD1:T12		/6.4
P24	☐	BU	1	X2:P24	KFD1:T33		/6.4
45	☐	BU	1	KFD1:X1	X4:45		/6.4
4	☐	BU	1	KFD1:14	X4:4		/6.6
P24	☐	BU	1	X2:P24	KFD1:13		/6.6
26	☐	BU	1	TA1:A	X4:26		/6.8
4	☐	BU	1	X4:4	TA1:C		/6.8
P24	☐	BU	1	X2:P24	TA1:SE		/7.3
8	☐	BU	1	X4:8	TA1:STF	x3 Loops @RFB3	/7.4
5	☐	OG	.34	S2:11	S1:13	Double Ferrule	/7.4
P24	☐	BU	1	X2:P24	X4:5		/7.4
P24	☐	BU	1	X2:P24	X2:P24		/7.7
P24	☐	BU	.34	MDPS1:13	MDPS1:15		/9.3
P24	☐	BU	.34	MDPS1:15	MDPS1:17		/9.3
P24	☐	BU	.34	MDPS1:17	MDPS1:19		/9.4
P24	☐	BU	.34	MDPS1:19	MDPS1:22		/9.4
P24	☐	BU	.34	MDPS1:22	MDPS1:25		/9.5
P24	☐	BU	.34	MDPS1:25	MDPS1:28		/9.5
P24	☐	BU	.34	MDPS1:28	MDPS1:31		/9.5
35	☐	BU	1	K1:14	X4:35		/8.1
36	☐	BU	1	K1:11	X4:36		/8.1
P0	☐	WHBU	1	K1:A2	X2:P0		/8.7
37	☐	BU	1	X4:37	K1:A1		/8.7

☑ = Wire connection terminated ☐ = Add wire connection

METTLER TOLEDO
SAFELINE
Metal Detection

Mettler-Toledo Product Inspection
1571 Northpointe Parkway
Lutz, FL 33558

Main: (813) 889-9500
Fax: (813) 881-0840
24/7 Support: (800) 447-4439
www.mt.com/pi

This drawing and any design, development, invention, or copyright which it may embody or represent are the sole property of Mettler-Toledo. This drawing may not be copied in whole or in part, nor any subject matter shwn herein be manufactured, without the prior express written consent from an authorized agent of Mettler-Toledo.
This safety circuit diagram is an outcome of a comprehensive risk assesment and qualification of the circuit components and architecture. This safety circuit should not be modified in any manner at any time without the express written consent of Mettler-Toledo. Modification of the circuit structure or components may cause damage to property, injury to persons, or death.

Project Name: EPL010605	Project Number: EPL010605	Change	9/26/2023	Assembly ID: 30916892 A	ECN No.
Project Description: M34R V5 Metal Detector SL1500		Drawn: E. Ymeraj	9/13/2023	Function	Scale: 1 : 1
Variant Description: Enclosure, EAC,Main SL1500, EL_ENC_B		Checked: D. Doyle	9/13/2023	Mounting Location / Project Status	Format: ANSI A
Page Description: Wire Connection List		Document Type: Electrical Schematic		DCC: &EFS1 / Project Rev: A	Page: 16 / 16